IT Degree Game Design Prerequisites Flowchart

'09-'10 Catalog

New River COMMUNITY COLLEGE

Critical Path Pre-requisites

IT Core Course

IT Specialization Course

Other Required Course

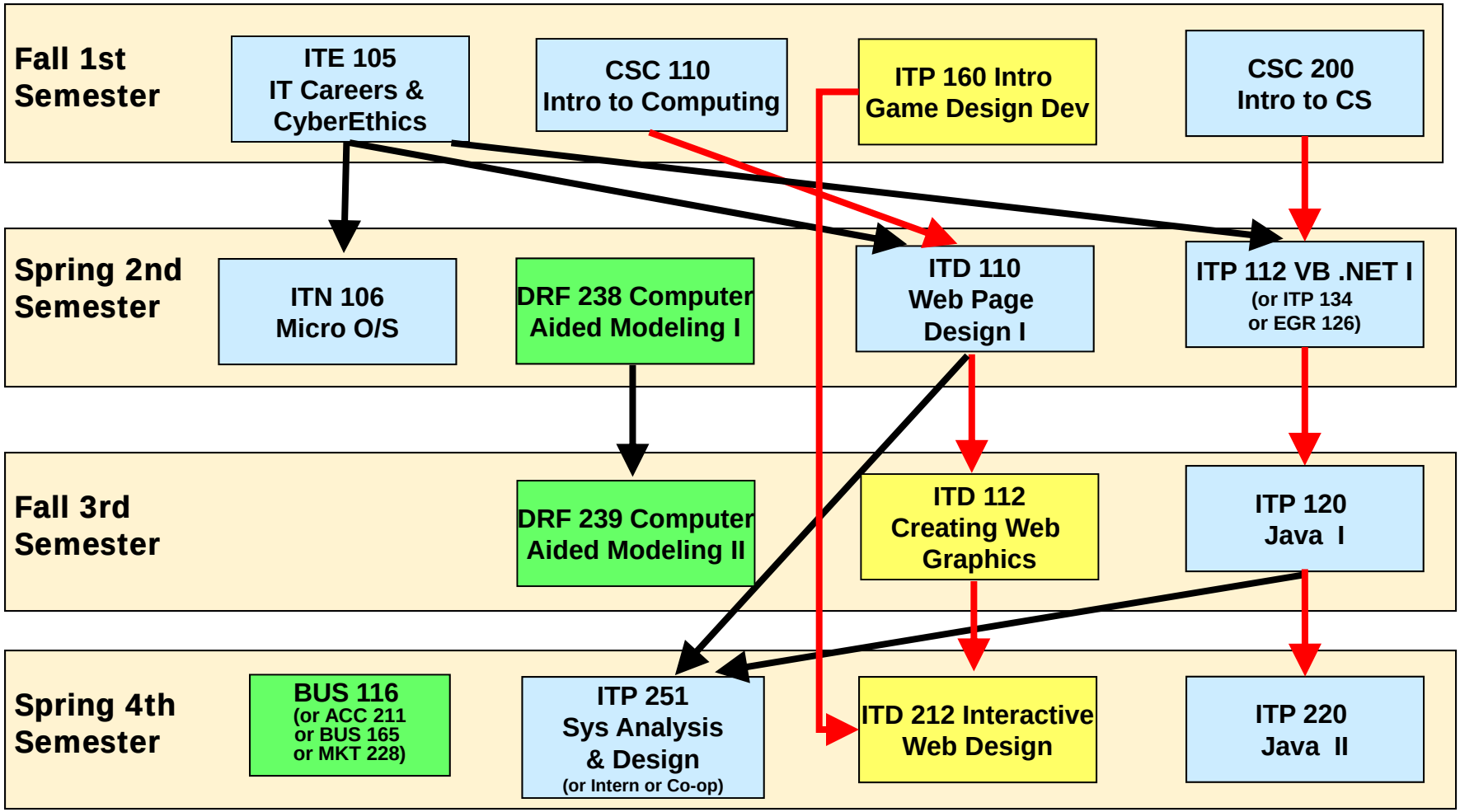

Updated 12-9-09

Created by Mrs. Eaton